Black Granite Surface Plates

- Black Granite Surface Plates meet or exceed JIS B7513/ISO-8512-2 Federal Specification GGG-P-463c.
- Harder then steel.
- Does not nick or burr.
- Retains accuracy for years.
- Auto-coliimator checked for overall accuracy.
- Guaranteed repeat reading.
  Includes an inspection certificate to show the unilateral accuracy of plate.
- Does not rust or corrode.
- Surface Accuracy : 0.013~0.0065 / 100 mm

Surface Plates

Unit:mm

ORDER NO.	SIZE	SURFACE ACCURACY	APPROX. WEIGHT	CODE NO.
	mm	mm	kgs	
VSG-04	250x300x52	0.0065	12.6	2021-019
VSG-05	300x300x60	0.0065	25	2021-020
VSG-06	300x450x60	0.0065	31	2021-021
VSG-07	450x450x75	0.0065	46	2021-022
VSG-09	450x600x100	0.007	79	2021-023
VSG-10	600x600x100	0.009	110	2021-024
VSG-11	600x900x110	0.009	210	2021-025
VSG-13	900x1200x135	0.012	470	2021-027
VSG-14	1000x1000x135	0.012	450	2021-028
VSG-15	1000x1500x200	0.013	670	2021-029
VSG-21	900x900x160	0.013	380	2021-032

NEW

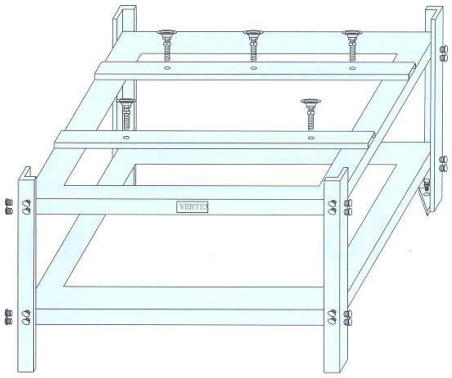

Strong & Rigid

Separated Modular Design DIY Type.
Low Profile Packing
With Adjustment Screw For Leveling

Black Granite Surface Plates Stand

ORDER NO.	STAND SIZE	KGS	CODE NO.
	mm		
VSGD-09N	450x600x700		2021-023N
VSGD-10N	600x600x700		2021-024N
VSGD-11N	600x900x700		2021-025N
VSGD-13N	900x1200x700		2021-027N
VSGD-14N	1000x1000x700		2021-028N
VSGD-15N	1000x1500x700		2021-029N
VSGD-21N	900x900x600		2021-032N